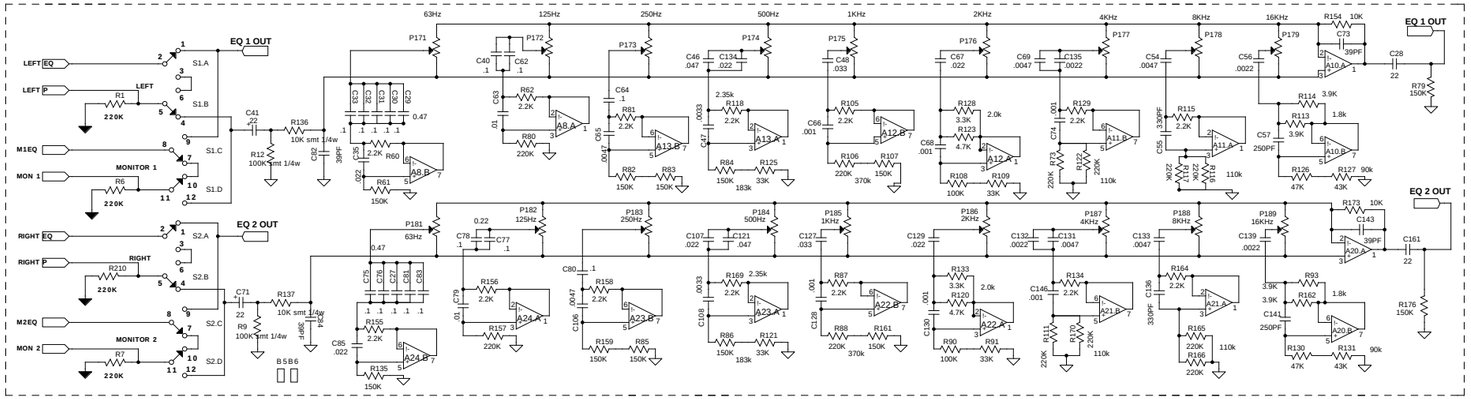

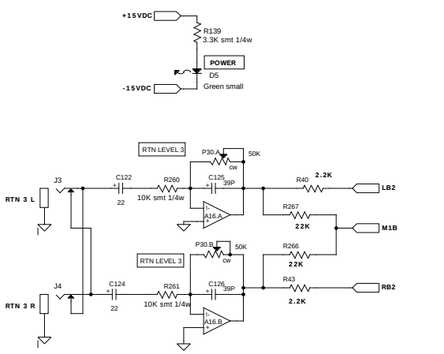

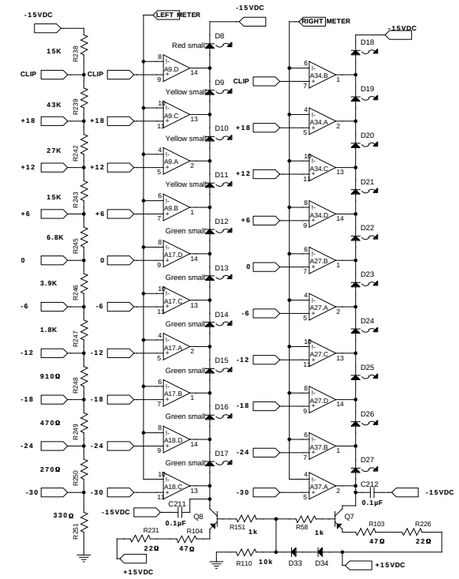

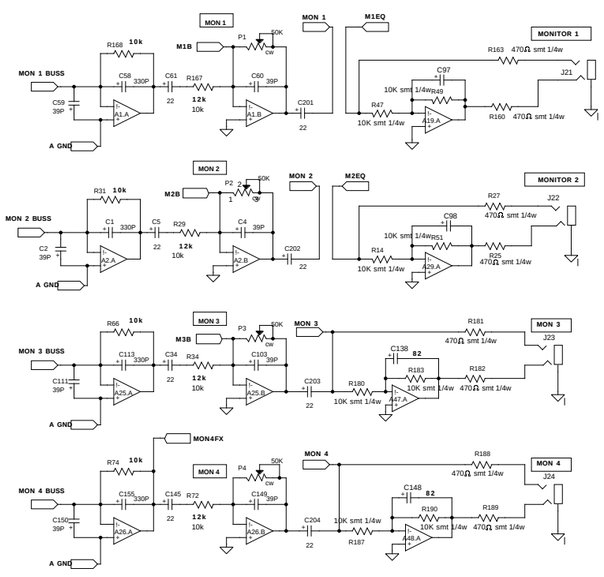

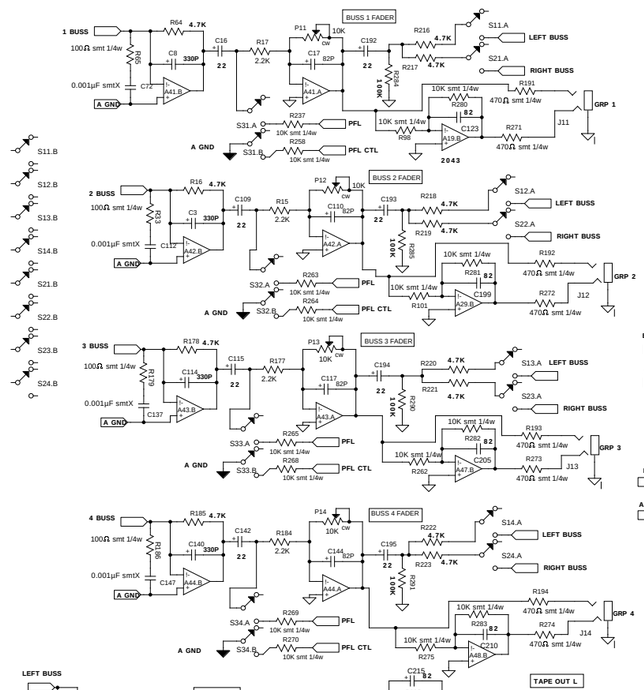

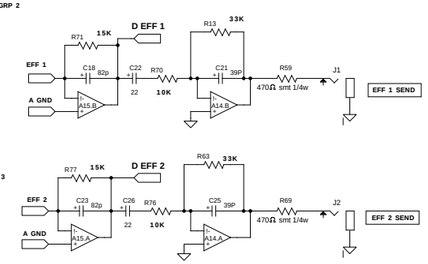

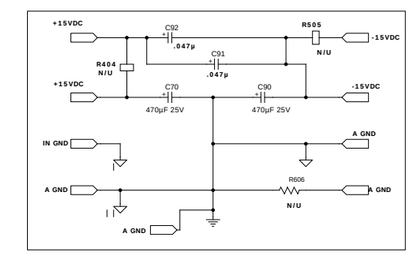

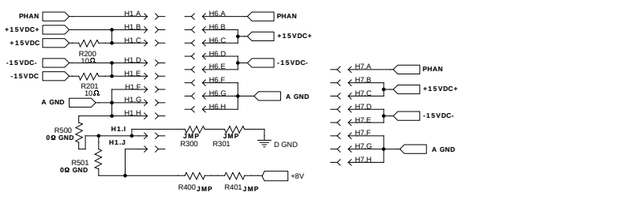

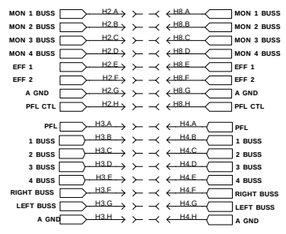

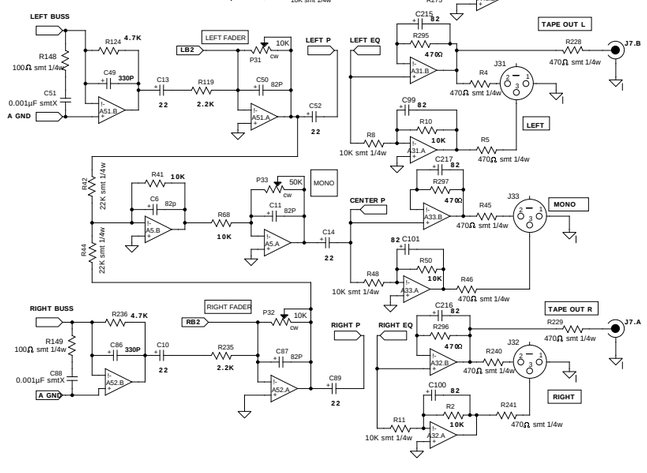

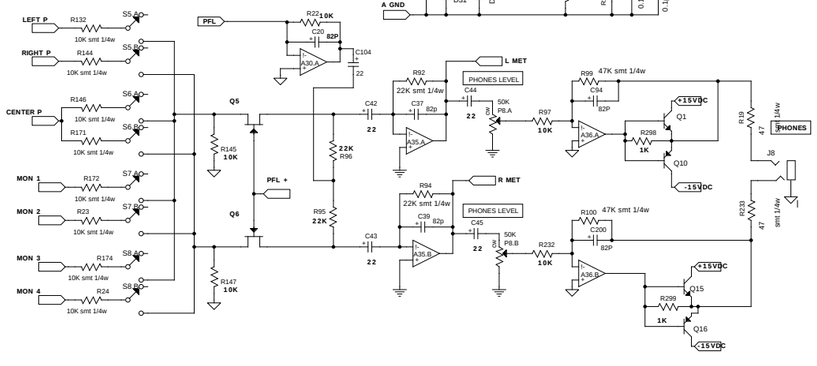

CARVIN
12340 World Trade Drive
San Diego, CA 92128
(858) 487-1600
FAX 521-6032

CONCERT SERIES - C1644

4 BUSS MASTER DUAL DSP - SMT

DRAWN BY: ERIC PETERSEN	DATE: 08MAY01
APPROVED:	DATE:
PCB NO: 30-16444	REV: C
ASSY. NO: 80-16444	REV: C
REVISED BY: ERIC PETERSEN	DATE: 02AUG01